未注公差/General tolerances(mm)														
0 ~ 3	>3 ~ 6	>6 ~ 10	>10 ~ 18	>18 ~ 30	>30 ~ 50	>50 ~ 80	>80 ~ 120	>120 ~ 180	>180 ~ 250	>250 ~ 315	>315 ~ 400	>400 ~ 500	>500	0.1/10
±0.12	±0.18	±0.22	±0.26	±0.31	±0.37	±0.57	±0.80	±0.93	±1.05	±1.15	±1.60	±2.20	±2.50	±2°

UL 标准/UL Standard:		B	C	D
额定电压/电流/Rated Voltage(V)/Current(A)		300/6	/	300/6
IEC 标准/IEC Standard:				
过压类别/Overvoltage Category/污染等级/Pollution Degree		III/3	III/2	II/2
额定电压/电流/Rated Voltage(V)/Current(A)		320/6	400/6	630/6
额定脉冲电压(KV)/Rate Impulse Voltage(KV)		4	4	4
间距/Pitch(mm)/线数范围/Poles		6.35/N=28/32P		
使用温度范围/Operating temperature(°C)		-40～+105		
符合RoHS环保要求/Conform to RoHS		Yes		
5	Square nut	Steel	Zn Plated	
4	Fixator	Stainless steel	Sn Plated	
3	Housing	PA66+GF	UL94V-0	
2	Short pin header	Copper alloy	Sn Plated	
1	Long pin header	Copper alloy	Sn Plated	
ITEM	NAME OF PART	MATERIAL	NOTES	

A-A

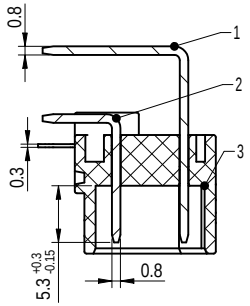

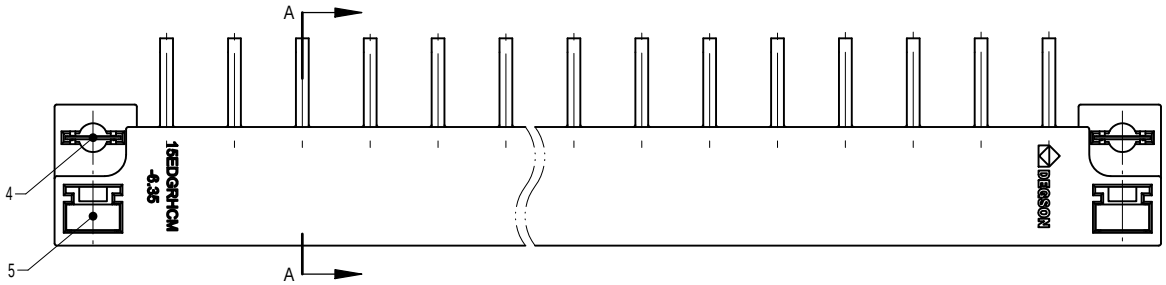

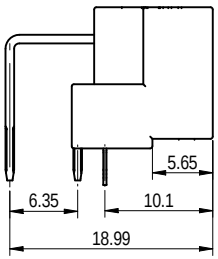

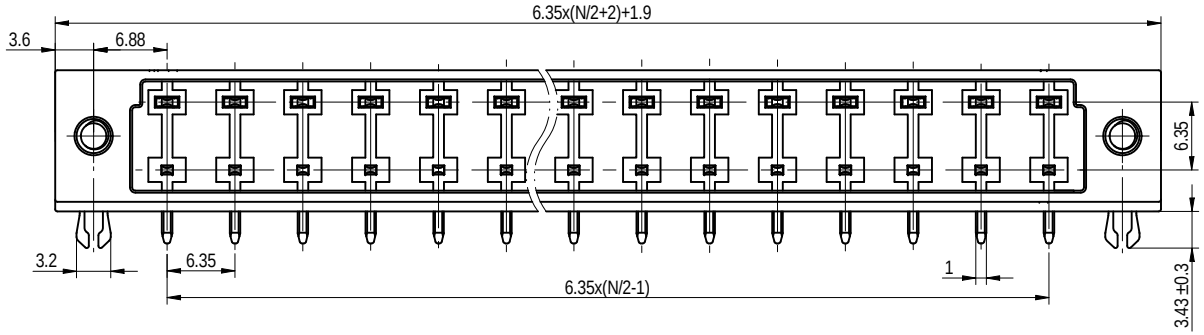

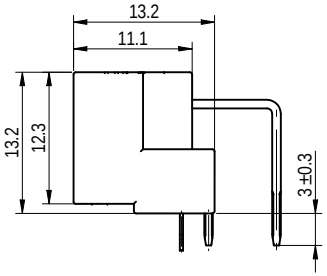

PCB LATOUT

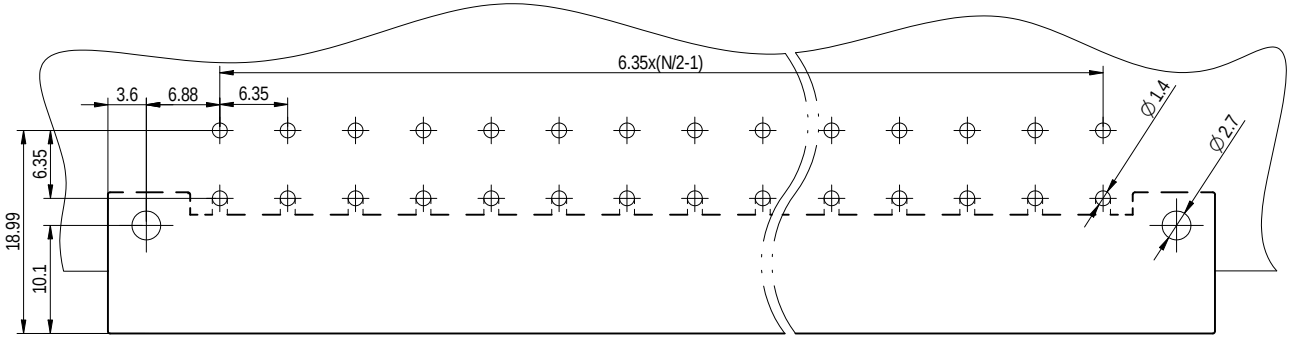

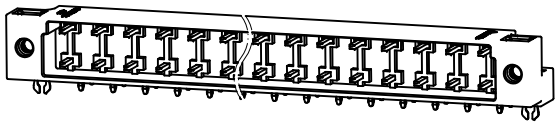

REV	ECN	DESCRIPTION	DRFT	DATE
00			刘强	2024.08.20

DEGSON

APPD:
CHKD:
DRFT: 刘强 2024.08.20
A3 单位 (inch)

MATERIAL: SURFACE/COLOR:
MAT NO./REV: /00 MAT STATUS: 样品

NAME: 15EDGRHCM-6.35-XXP-1Y-00Z(H)

DRAWING NO.	TYPE	DRAWING STATUS	SCALE	SHEET
200031808	CUSTOMER DRAWING	work	1:1	1/1

Transfer or duplication of this document as well as the utilization or communication of its contents are prohibited unless explicit authorization is granted. Violations will be liable for compensation. All rights reserved for patents, utility model or designs registrations. 没有得到书面授权，不得将本文件的内容复制、传播或用于其他目的。本公司保留对违反者追究赔偿责任的权利。