未注公差/General tolerances(mm)														
0 ~ 3	>3 ~ 6	>6 ~ 10	>10 ~ 18	>18 ~ 30	>30 ~ 50	>50 ~ 80	>80 ~ 120	>120 ~ 180	>180 ~ 250	>250 ~ 315	>315 ~ 400	>400 ~ 500	>500	0.1/10
±0.12	±0.18	±0.22	±0.26	±0.31	±0.37	±0.57	±0.80	±0.93	±1.05	±1.15	±1.60	±2.20	±2.50	±2°

PCB LAYOUT

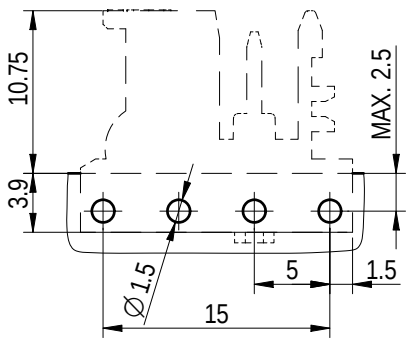

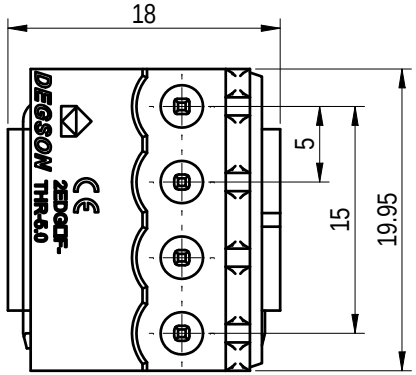

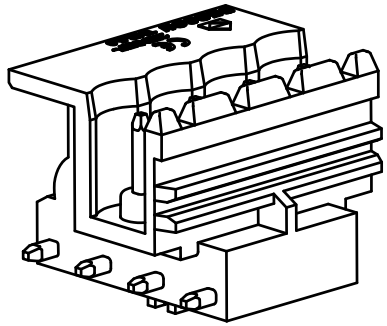

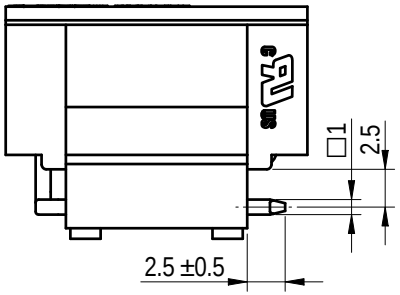

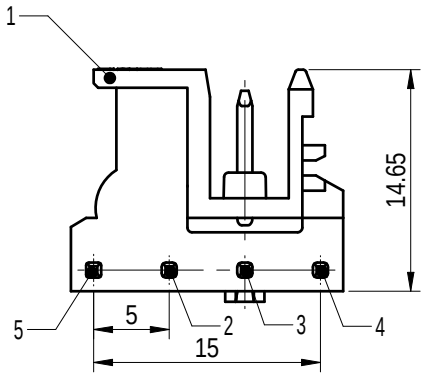

Note:
The A&Z(H) in the name means: A(H) and Z(H).

ITEM	NAME OF PART	MATERIAL	NOTES
5	Pin4	Copper	Sn Plated
4	Pin2	Copper	Sn Plated
3	Pin1	Copper	Sn Plated
2	Pin3	Copper	Sn Plated
1	Housing	Thermoplastic	UL94V-0

UL 标准/UL Standard:	B	C	D
额定电压/电流/Rated Voltage(V)/Current(A)	300/15	/	300/10
IEC 标准/IEC Standard:			
过压类别/Overvoltage Category/污染等级/Pollution Degree	III/3	III/2	II/2
额定电压/电流/Rated Voltage(V)/Current(A)	250/20	320/20	400/20
额定脉冲电压(KV)/Rate Impulse Voltage(KV)	4	4	4
使用温度范围/Operating temperature(°C)	-40～+120		
符合RoHS环保要求/Conform to RoHS	Yes		
标准颜色编号/Standard color number: PANTONE / RAL	/		

	REV	ECN	DESCRIPTION	DRFT	DATE
	00			方哲盛	2022.12.09

DEGSON

APPD:	兰春华	2022.12.09
CHKD:	龚耀志	2022.12.09
DRFT:	方哲盛	2022.12.09

A4 mm (inch)

MATERIAL:
SURFACE/COLOR:
MAT NO./REV: - / 00
MAT STATUS: 批量

NAME: 2EDGRF-THR-5.0-04P-1Y-00A&Z(H)

DRAWING NO.	TYPE	DRAWING STATUS	SCALE	SHEET
200019655	CUSTOMER DRAWING	已发布	2:1	1/1

Transfer or duplication of this document as well as the utilization or communication of its contents are prohibited unless explicit authorization is granted. Violations will be liable for compensation. All rights reserved for patent, utility model or designs registrations. 除非经明确授权，否则禁止转让、复制、利用、交流本文件的内容。侵犯者将负赔偿责任。本公司保留对涉及发明、实用新型和外观专利的所有权利。