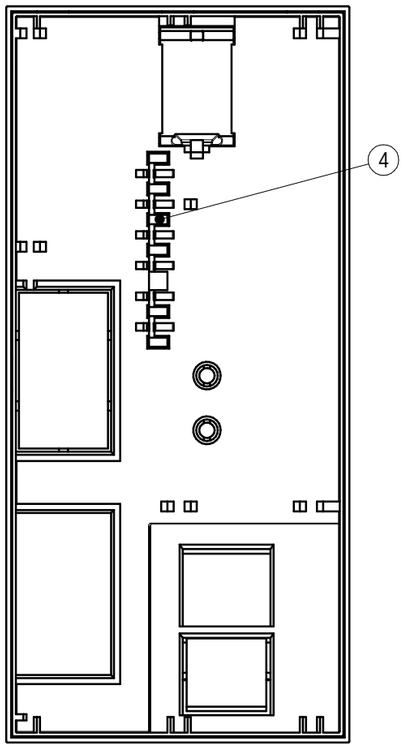

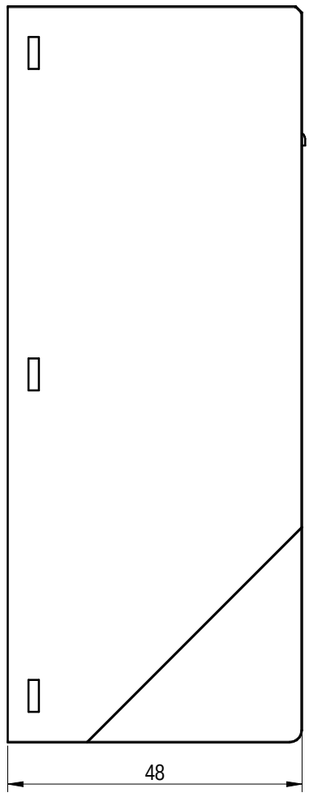

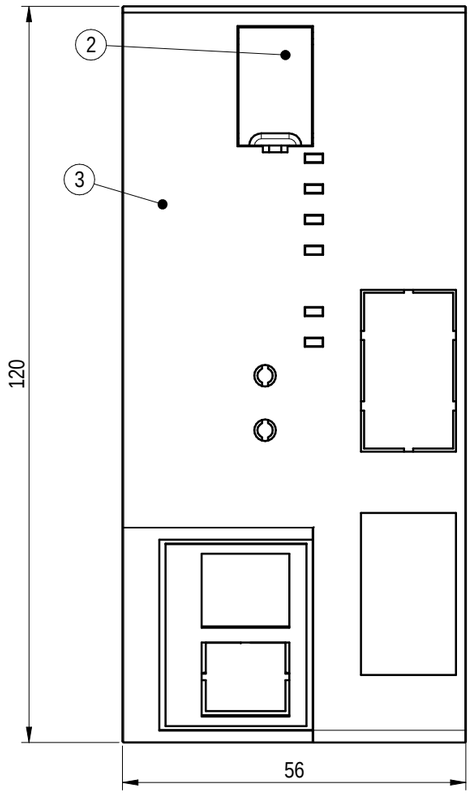

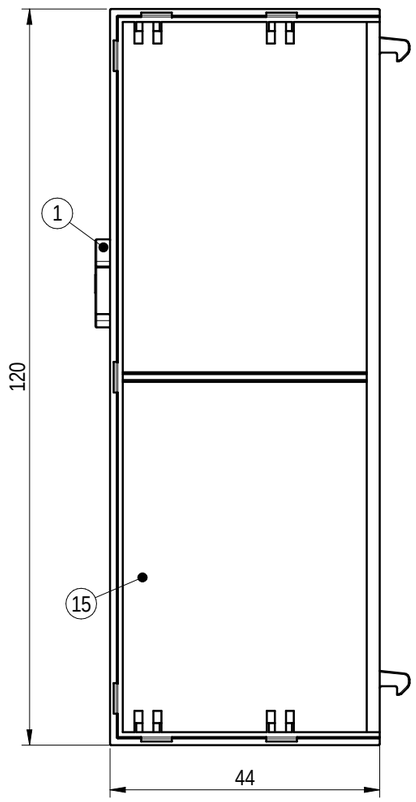

未注公差/General tolerances(mm)														
0 ~ 3	>3 ~ 6	>6 ~ 10	>10 ~ 18	>18 ~ 30	>30 ~ 50	>50 ~ 80	>80 ~ 120	>120 ~ 180	>180 ~ 250	>250 ~ 315	>315 ~ 400	>400 ~ 500	>500	0.1/10
±0.12	±0.18	±0.22	±0.26	±0.31	±0.37	±0.57	±0.80	±0.93	±1.05	±1.15	±1.60	±2.20	±2.50	±2°

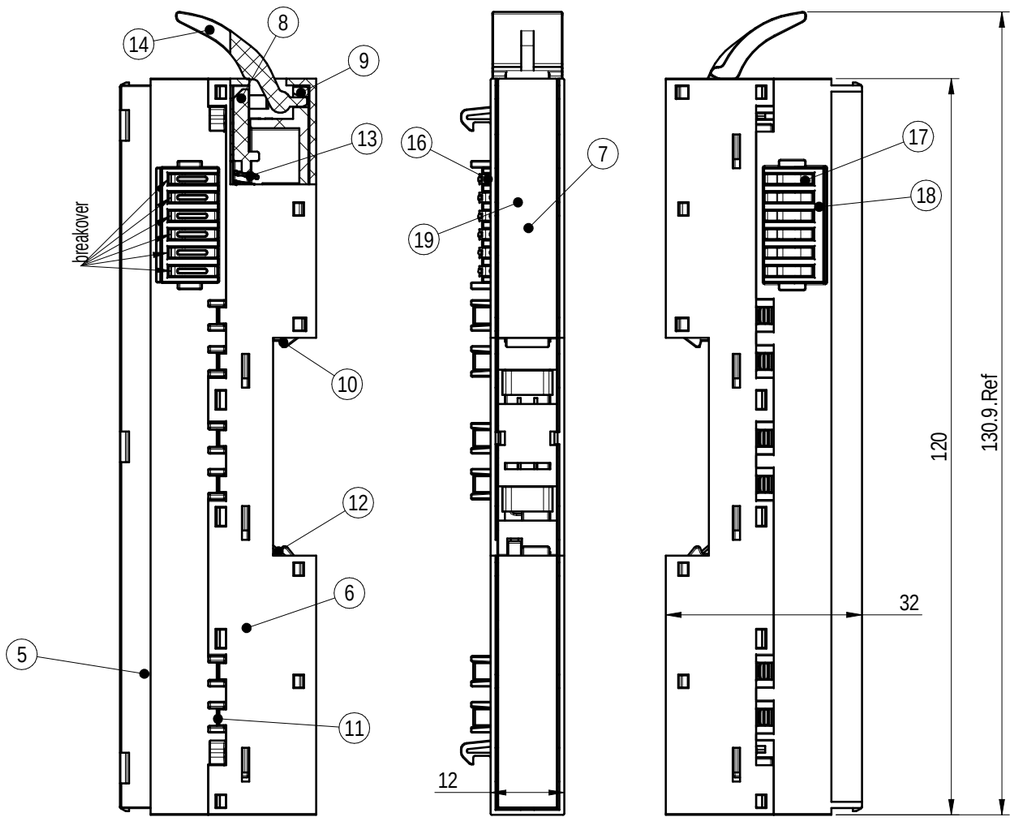

Separate packing
and shipment

ITEM	NAME OF PART	MATERIAL	NOTES
19	Spring4	Copper alloy	Ni Plated
18	Housing12	PA66	UL94V-0
17	Spring3	Copper alloy	Au Plated
16	Spring2	Copper alloy	Au Plated
15	Housing11	PA66+GF%	UL94V-0
14	Housing10	PA66+GF%	UL94V-0
13	Spring1	Stainless steel	/
12	Clamp2	Copper alloy	Au Plated
11	Clamp1	Copper alloy	Au Plated
10	Housing9	PA66+GF%	UL94V-0
9	Housing8	PA66+GF%	UL94V-0
8	Housing7	PA66+GF%	UL94V-0
7	Housing6	PA66+GF%	UL94V-0
6	Housing5	PA66+GF%	UL94V-0
5	Housing4	PA66+GF%	UL94V-0
4	Housing3	PC	UL94V-2
3	Housing2	PA66+GF%	UL94V-0
2	Cover	PA66+GF%	UL94V-0
1	Housing1	PA66	UL94V-0
ITEM	NAME OF PART	MATERIAL	NOTES

	B	C	D
UL 标准/UL Standard:			
额定电压/电流/Rated Voltage(V)/Current(A)	/	/	/
IEC 标准/IEC Standard:			
过压类别/Overvoltage Category/污染等级/Pollution Degree	III/3	III/2	II/2
额定电压/电流/Rated Voltage(V)/Current(A)	/	/	/
额定脉冲电压(KV)/Rate Impulse Voltage(KV)	/	/	/
螺丝扭矩/Torque Tightening(N· m/Lb.in)	/		
线径范围(硬线和软线)/Wire Range(rigid and flexible)(AWG/mm²)	/		
间距/Pitch(mm)/线数范围/Poles	/		
剥线长度/Stripping length(mm)	/		
使用温度范围/Operating temperature(°C)	-40～+105		
符合RoHS环保要求/Conform to RoHS	Yes		
标准颜色编号/Standard color number: PANTONE	/		

REV	ECN	DESCRIPTION	DRFT	DATE
00		New Drawing	马恩开	2023.01.03

DEGSON

APPD:	李根劳	2023.01.03
CHKD:	马恩开	2023.01.03
DRFT:	马恩开	2023.01.03

A3 mm (inch)

MATERIAL: SURFACE/COLOR:

MAT NO./REV: 30060000139-1 / 02 MAT STATUS: work

NAME: DF800-001-3-C1-00Z(H)

DRAWING NO.	TYPE	DRAWING STATUS	SCALE	SHEET
200267390	CUSTOMER DRAWING	work	1:1	1/1

Transfer or duplication of this document as well as the utilization or communication of its contents are prohibited unless explicit authorization is granted. Violations will be liable for compensation. All rights reserved for patent, utility model or designs registrations. 除非经书面授权，否则禁止转让、复制、利用、交流本文件的内容。违反者应赔偿损失。本公司保留对涉及专利、实用新型和外观设计专利的所有权利。